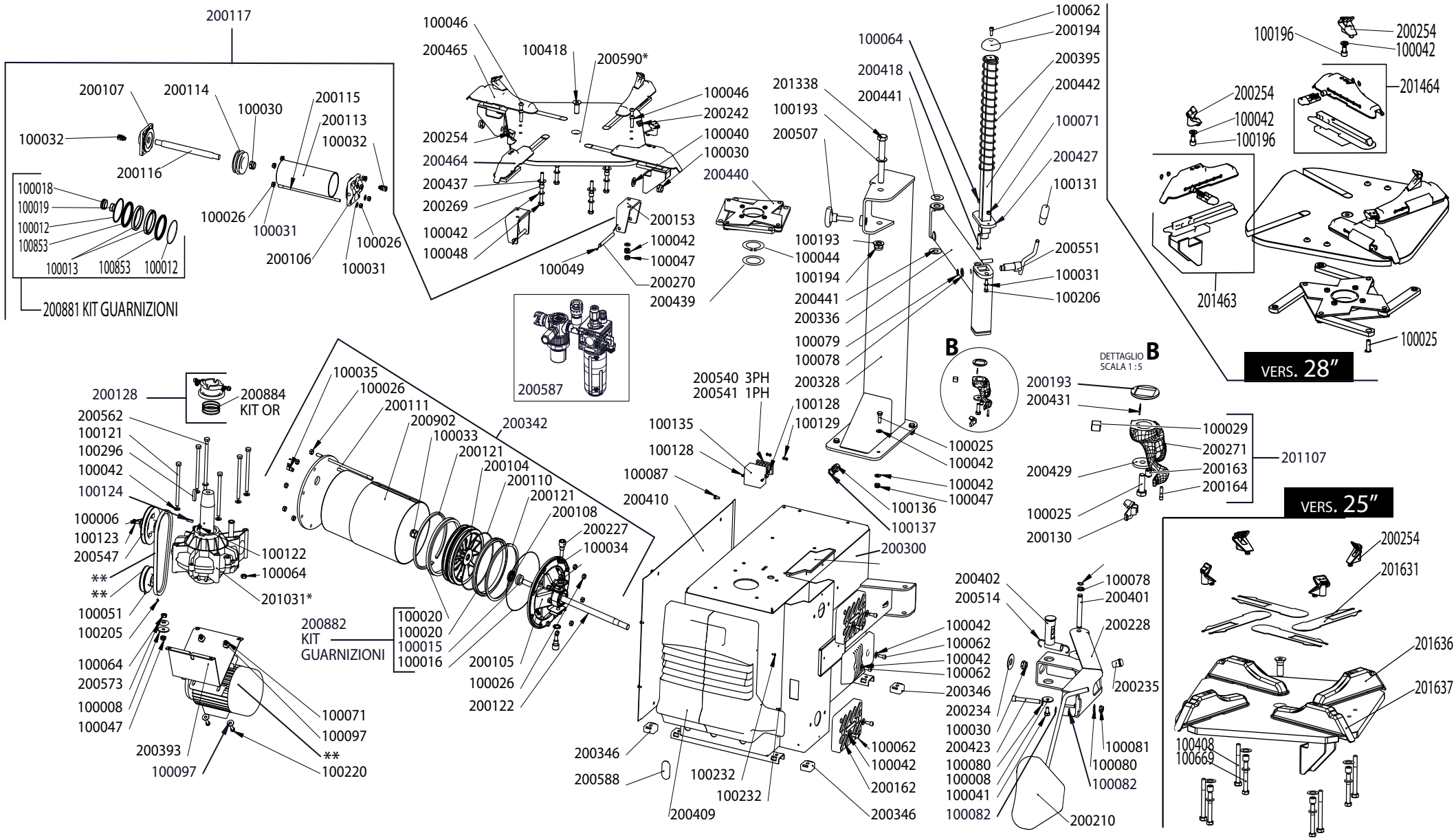

**	Specificare dati motore Specify engine details	Volt	Ph	Hz	RPM

* Comunicare matricola macchina
Transmit machine serial number

COD. 200894

REV. 3

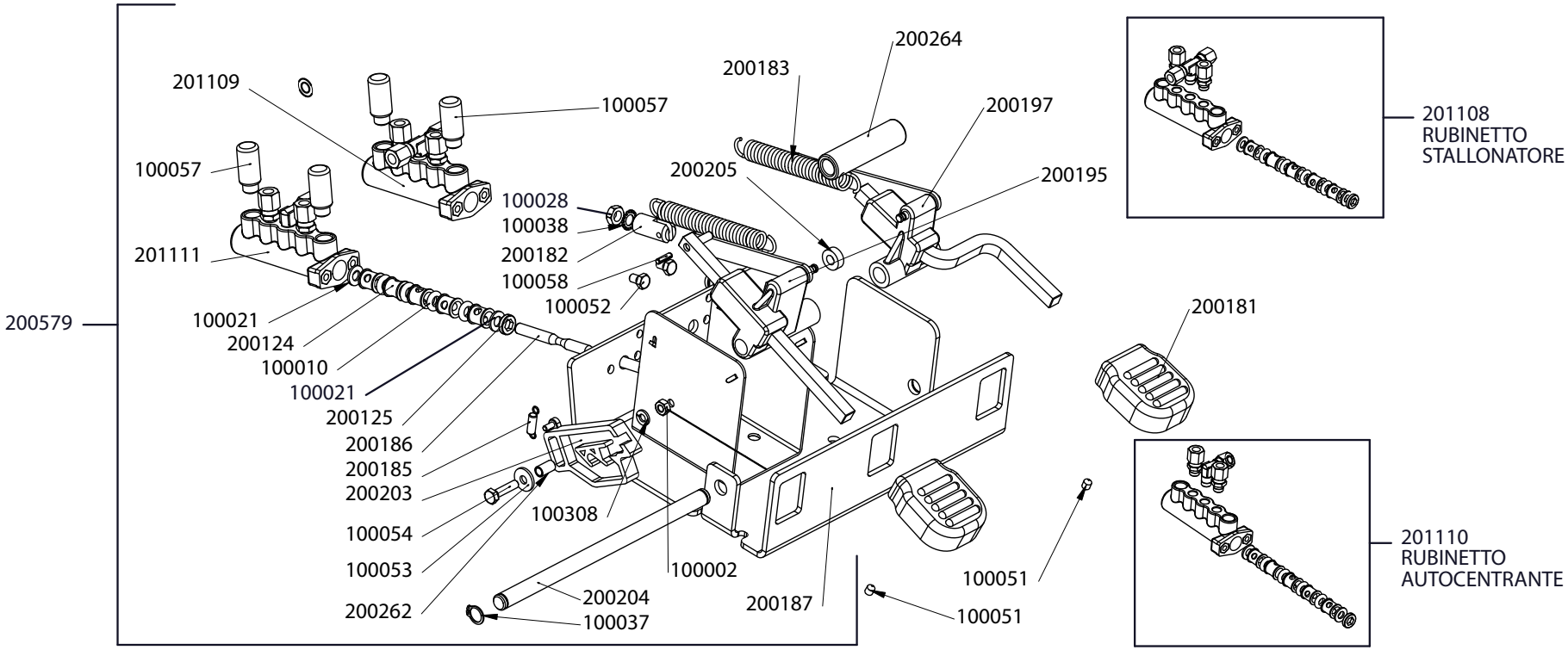

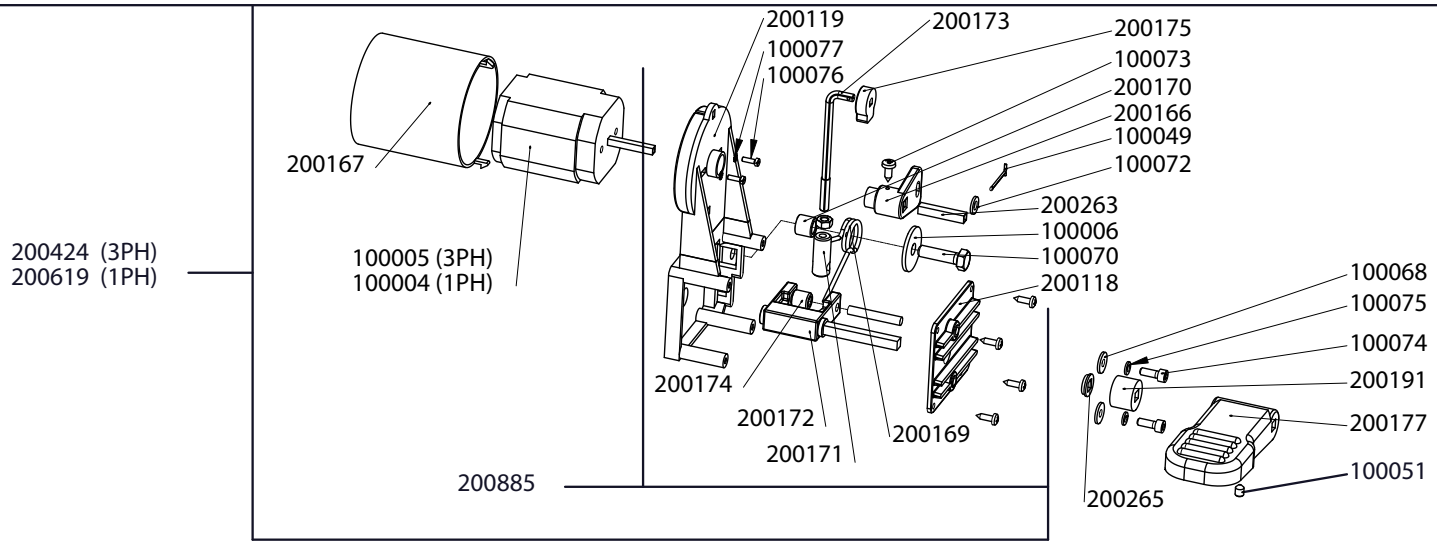

COD. 200895

REV. 1

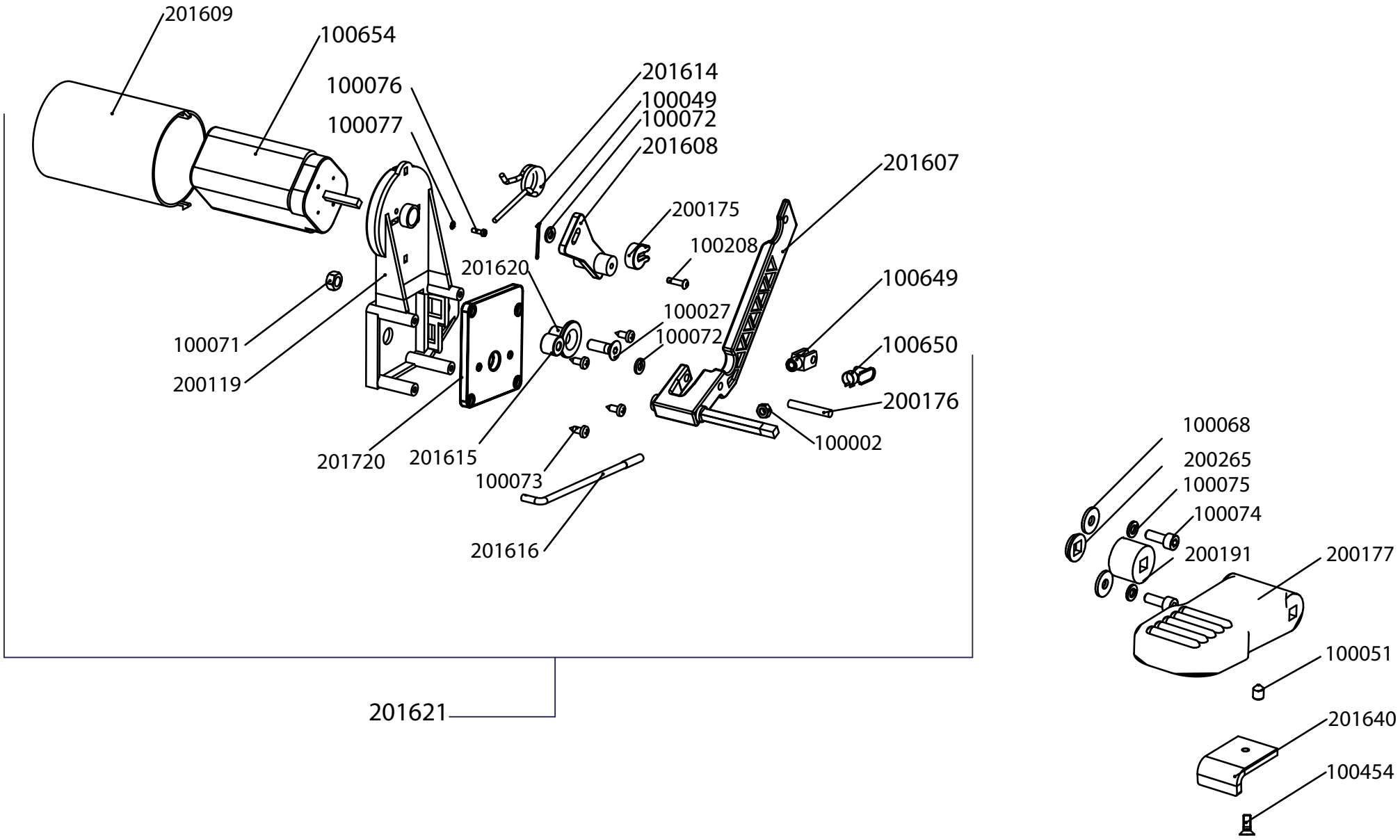
201609
100654
100076
100077
201614
100049
100072
201608
201607
200175
100208
201620
100649
100027
100072
100071
100650
200119
200176
100002
201720
201615
100073
201616
201621
100068
200265
100075
100074
200191
200177
100051
201640
100454

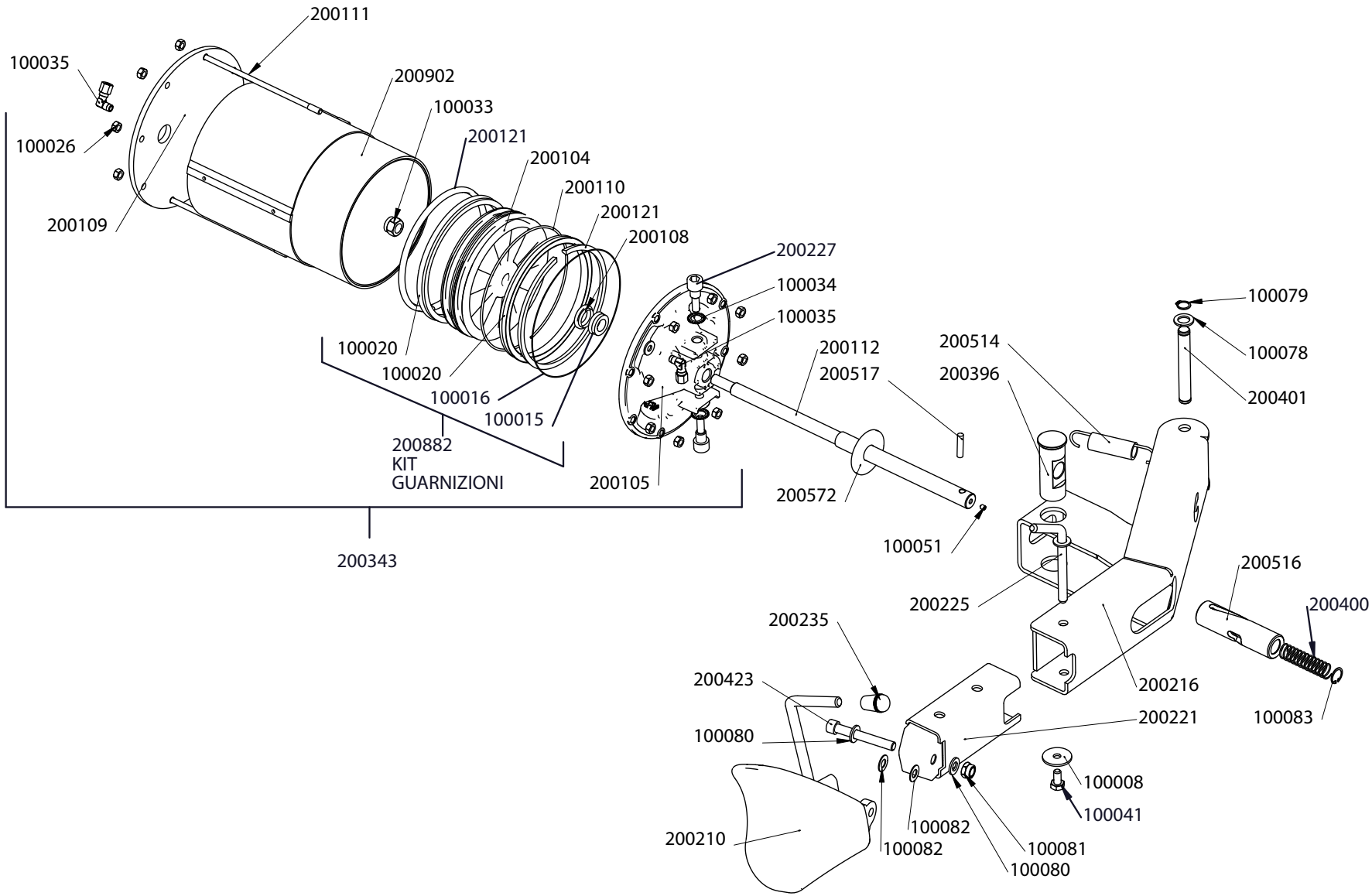
200111
100035
200902
100033
100026
200121
200104
200110
200121
200109
200108
200227
100034
100035
100079
100078
200514
200112
200396
200517
200401
100020
100020
100016
100015
200882
KIT
GUARNIZIONI
200105
200572
100051
200343
200516
200225
200400
200235
200216
200423
200221
100083
100080
100008
100041
100082
200210
100082
100081
100080

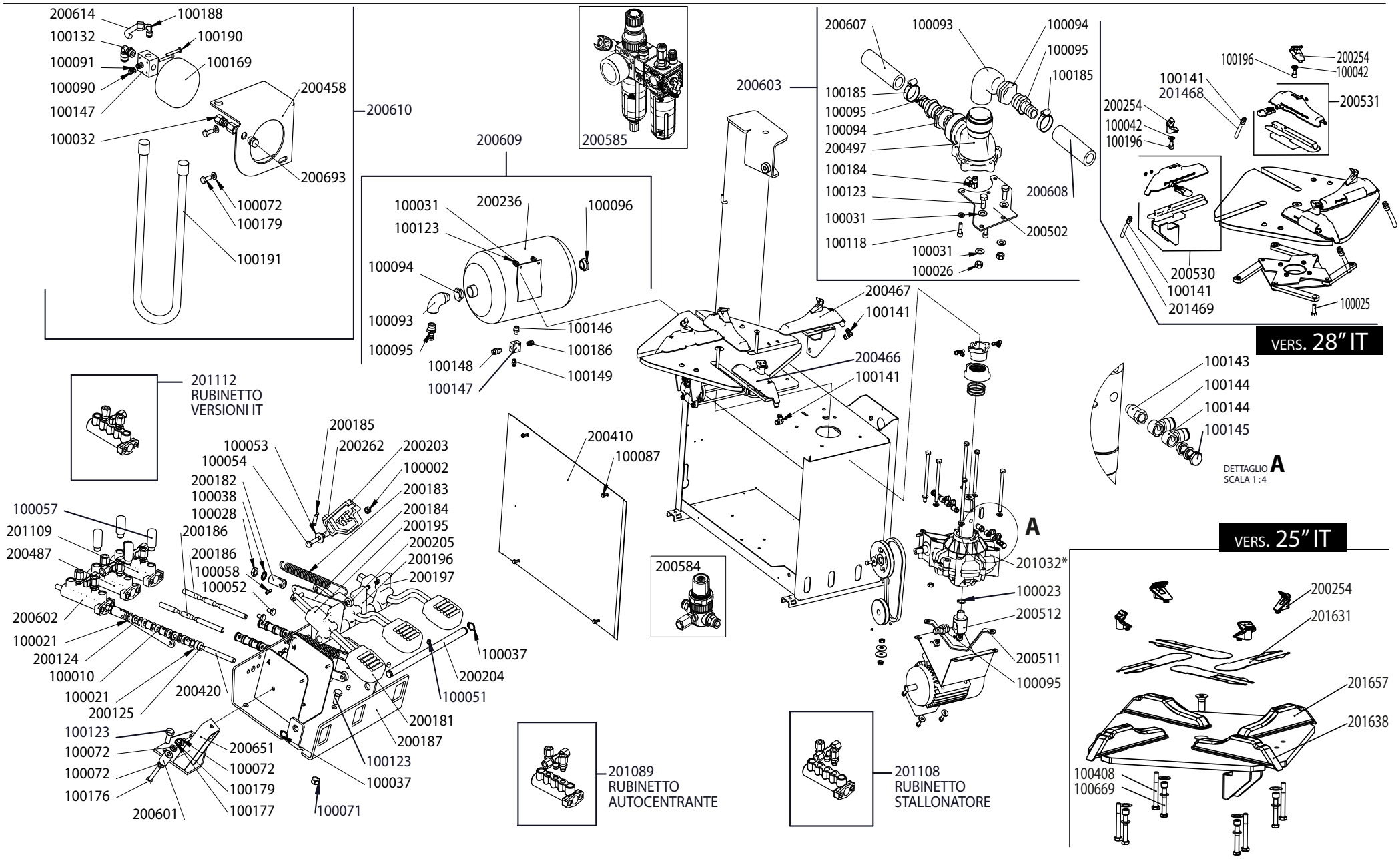

* Comunicare matricola macchina
Transmit machine serial number

VERS. IT - PG COD. 200896 REV. 3

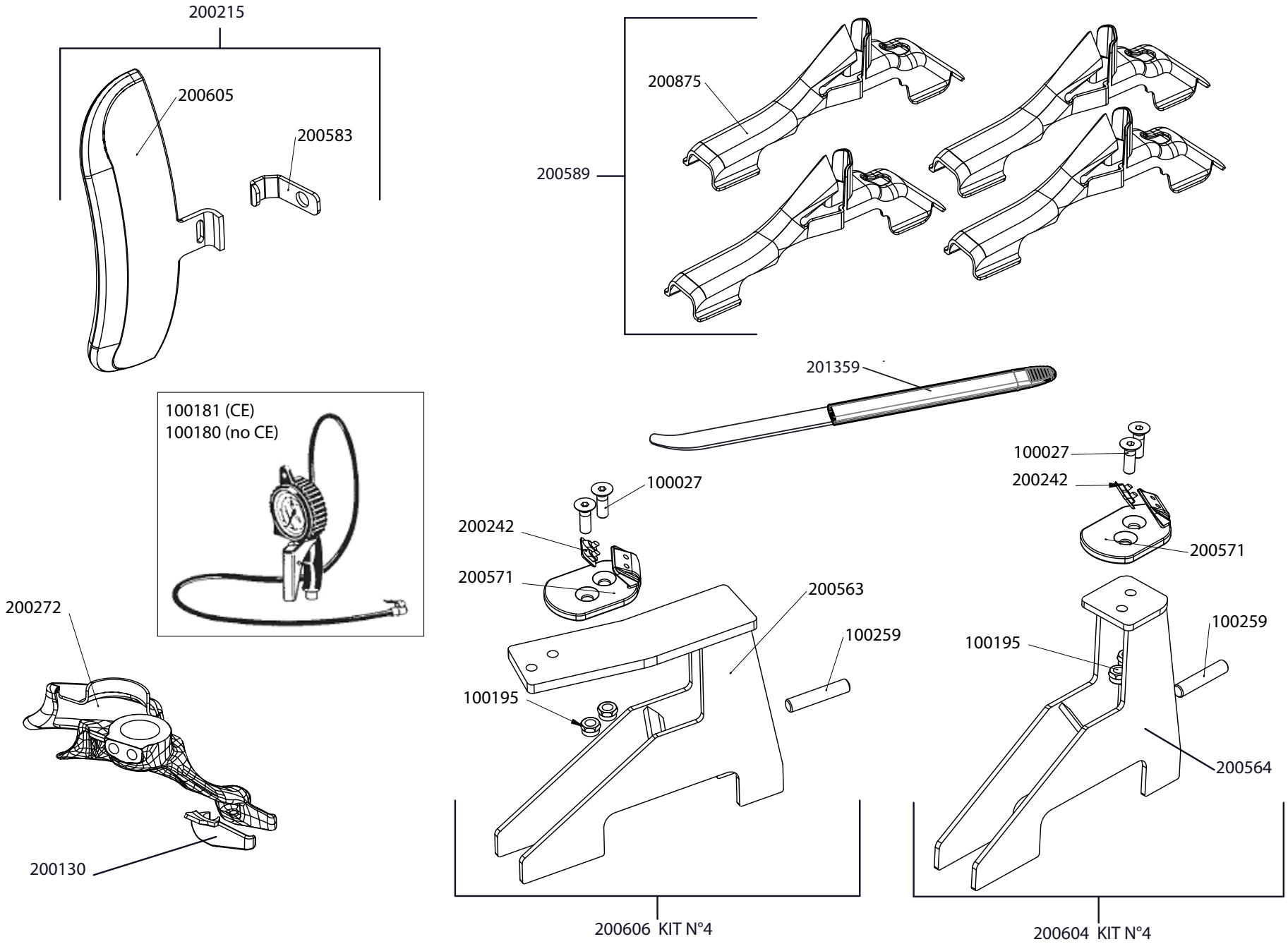

OPTIONAL COD. 200893 REV. 0